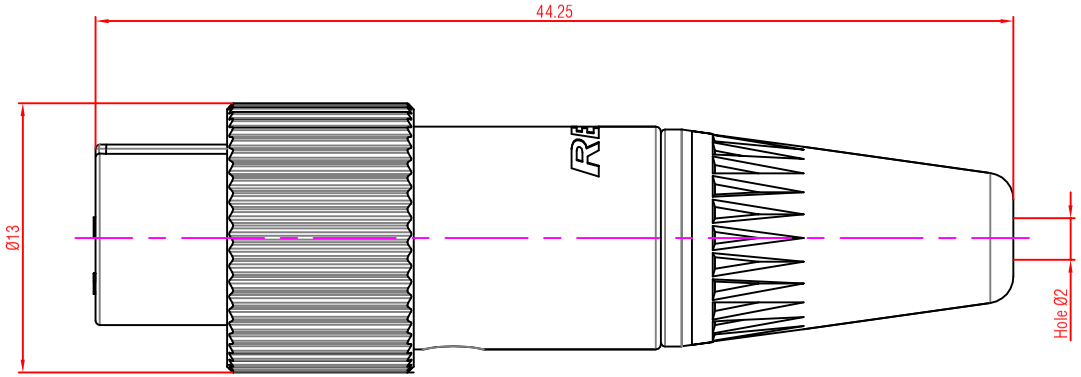

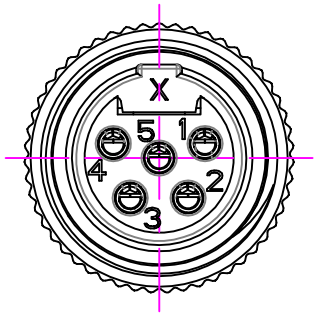

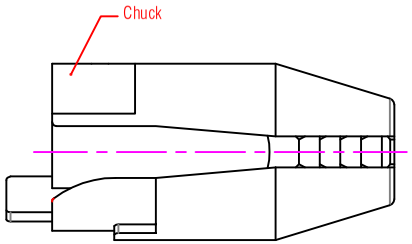

Note:
1. All dimensions in mm.
2. Tolerances not specified is ±0.20mm.

RT5FCT-B-D	Blulk Packing
RT5FCT-B	Individual PE Bag
Product Name	Packing Type

Rev.	Revision Details	Date	Name

THIS DOCUMENT IS THE PROPERTY OF NEUTRIK. NO PART THEREOF MAY BE REPRODUCED AND USED WITHOUT THE PRIOR WRITTEN CONSENT OF THE OWNER

Material:

Scale: 4 : 1 (A3)

	Date:	Name:
Designer:	2020.11.11	Jie.Yu
Checked:	2020.11.11	Xiaonan.Wang
Approved:		

Title: Tiny XLR Female 5-Pin RT5FCT-B

Replaced By: 1

Replaces: 1

REAN

Drawing No.: