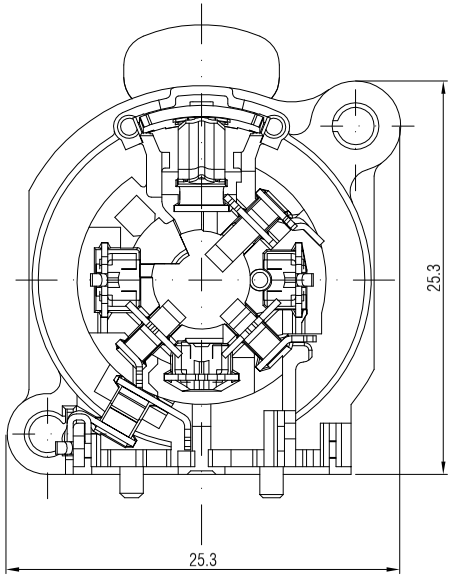

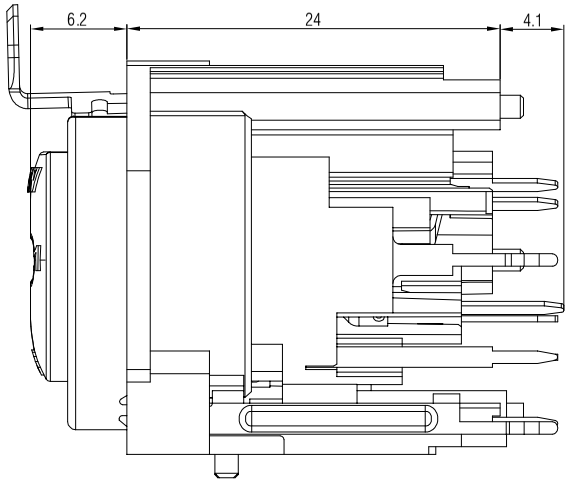

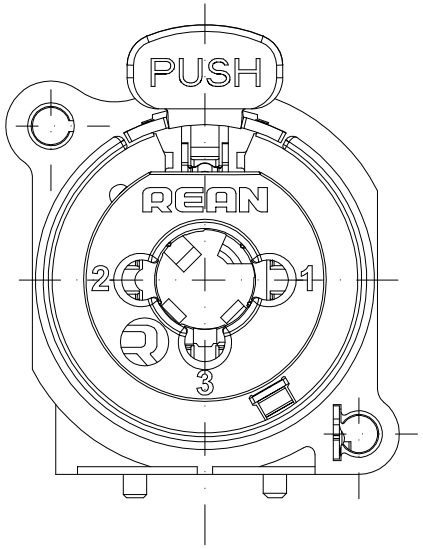

Panel cut out(Rear side)

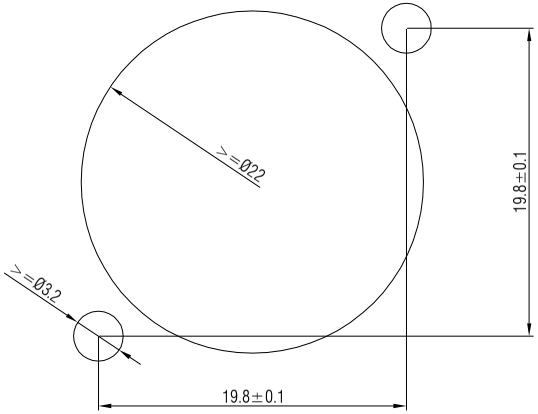

PCB Layout(Component side)

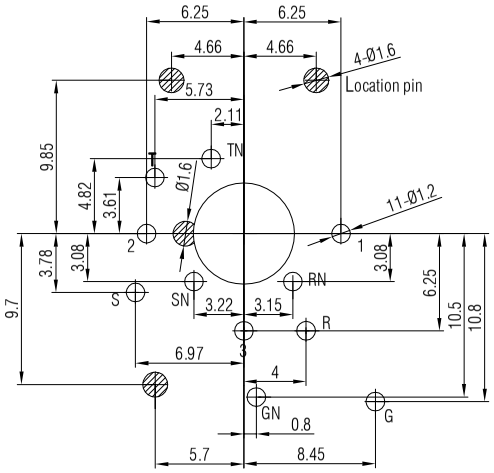

Normalling-Schemes

Jack- Normalling

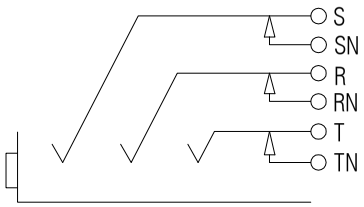

XLR

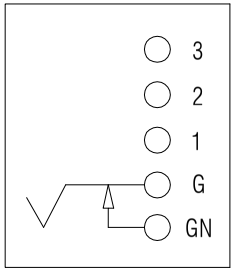

Note:

1. All dimensions in mm.
2. Tolerances not specified is ±0.20mm.

Rev.	Revision Details	Date	Name

THIS DOCUMENT IS THE PROPERTY OF NEUTRIK. NO PART THEREOF MAY BE REPRODUCED AND USED WITHOUT THE PRIOR WRITTEN CONSENT OF THE OWNER

Material:	Scale:		Date:	Name:
	3 : 1 (A3)	Designer:	2020.01.04	Jacky
		Checked:	2020.01.04	Abraham
		Approved:		

Title: RCJ10FA-V

Replaced By:	1
Replaces:	1
Drawing No.:	3.664.043

REAN