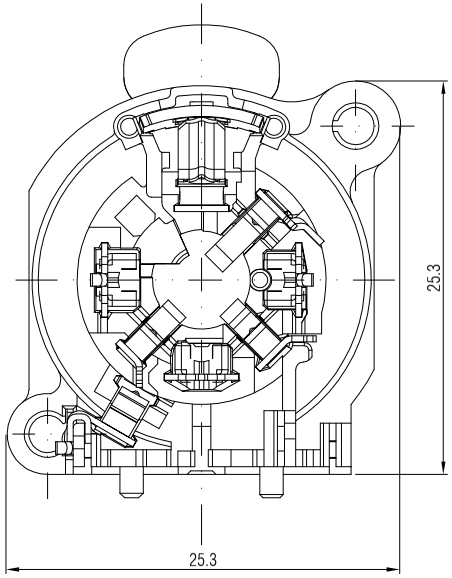

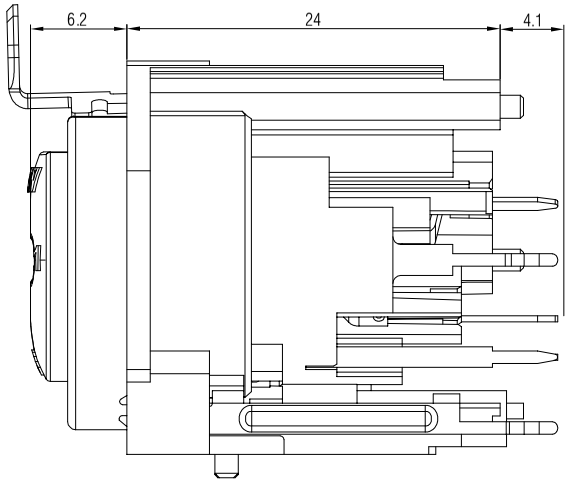

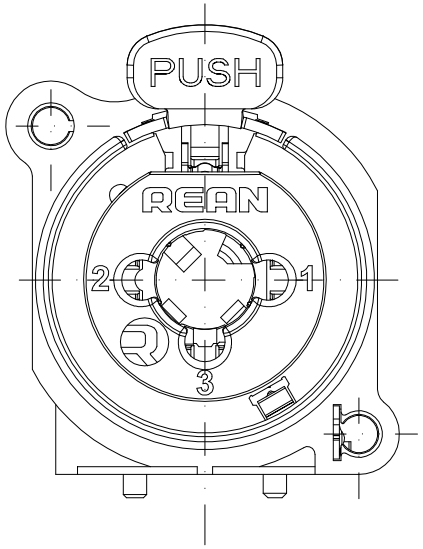

Panel cut out(Rear side)

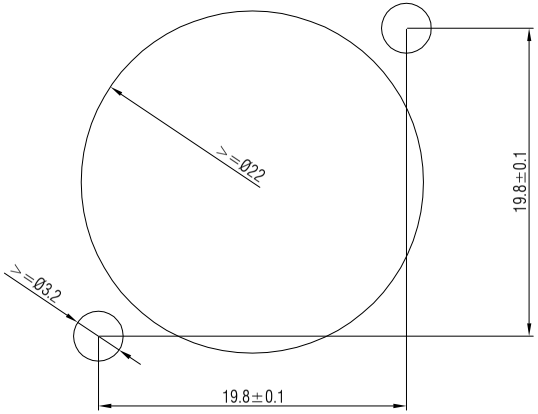

PCB Layout(Component side)

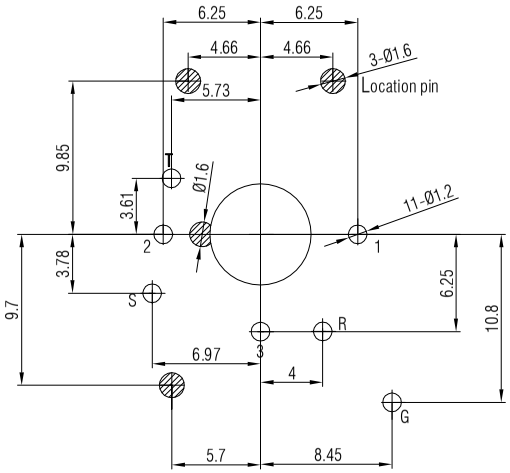

Normalling-Schemes

Jack- Normalling

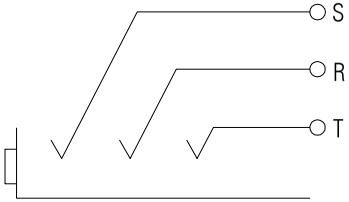

XLR

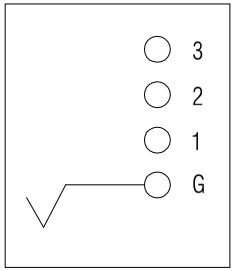

Note:

1. All dimensions in mm.
2. Tolerances not specified is ±0.20mm.

Rev.	Revision Details	Date	Name

THIS DOCUMENT IS THE PROPERTY OF NEUTRIK. NO PART THEREOF MAY BE REPRODUCED AND USED WITHOUT THE PRIOR WRITTEN CONSENT OF THE OWNER

		Date:	Name:
Material:			
Scale: 3 : 1 (A3)	Designer:	2020.01.04	Jacky
	Checked:	2020.01.04	Abraham
	Approved:		
Title: RCJ6FA-V	Replaced By:		1
	Replaces:		1
REAN	Drawing No.:		3.664.035