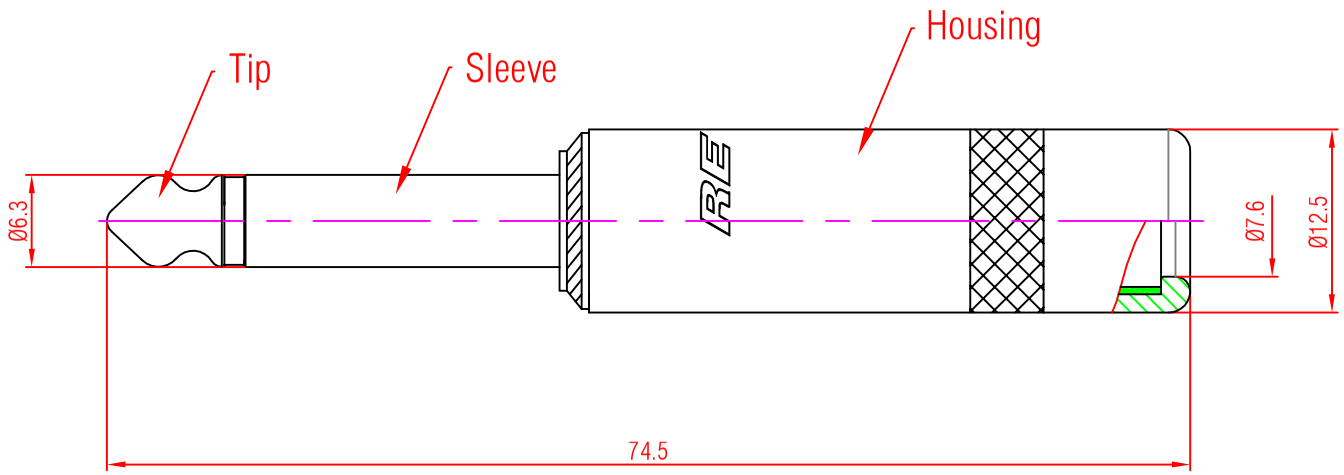

NYS224AG-*	金(Gold)	金(Gold)	金(Gold)
NYS224BG-*	黑(Black)	金(Gold)	金(Gold)
NYS224G-*	镍(Nickel)	金(Gold)	金(Gold)
NYS224B-*	黑(Black)	镍(Nickel)	镍(Nickel)
NYS224-*	镍(Nickel)	镍(Nickel)	镍(Nickel)
产品名称 (Product Name)	外壳电镀 (Housing Plating)	插杆套电镀 (Sleeve Plating)	滚柱电镀 (Tip Plating)

Note:

1. All dimensions in mm.
2. Tolerances not specified is ±0.20mm.

Rev.	Revision Details	Date	Name

THIS DOCUMENT IS THE PROPERTY OF NEUTRIK. NO PART THEREOF MAY BE REPRODUCED AND USED WITHOUT THE PRIOR WRITTEN CONSENT OF THE OWNER

Material:

Scale: 2 : 1

	Date:	Name:
Designer:	2020.11.13	Jie.Yu
Checked:	2020.11.13	Xiaonan.Wang
Approved:		

Title: 1/4" Straight Mono Plug NYS224BG

Replaced By: 1

Replaces: 1

Drawing No.:

REAN