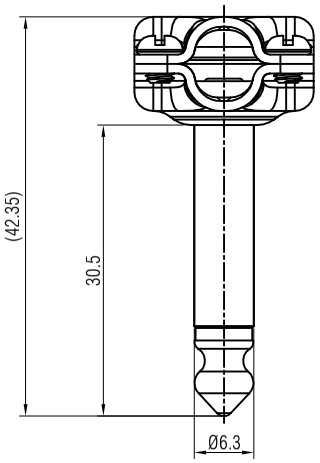

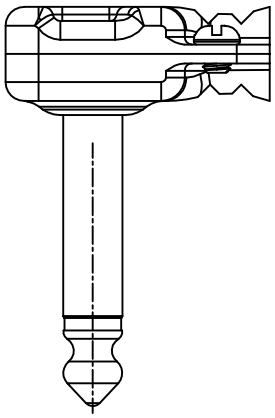

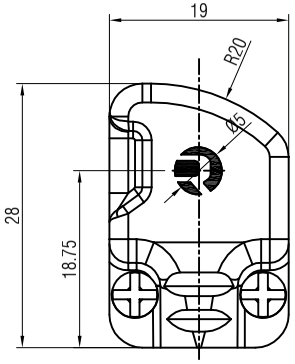

Note:
1. All dimensions in mm.
2. Tolerances not specified is ±0.2mm.

Rev.	Revision Details	Date	Name

THIS DOCUMENT IS THE PROPERTY OF NEUTRIK. NO PART THEREOF MAY BE REPRODUCED AND USED WITHOUT THE PRIOR WRITTEN CONSENT OF THE OWNER

Material:	Scale:		Date:	Name:
	2 : 1 (A3)	Designer:	2022.08.17	Jie.Yu
		Checked:	2022.08.17	Robin
		Approved:		

Title: RP2RCF

Replaced By:	1
Replaces:	1
Drawing No.:	

REAN