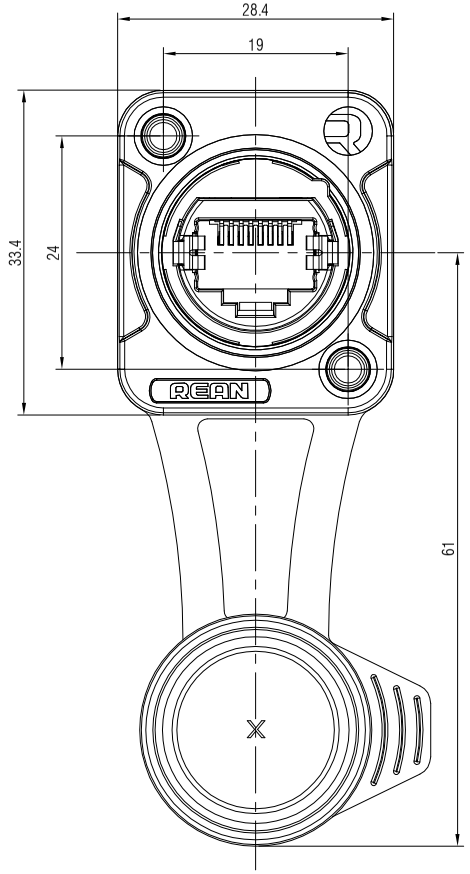

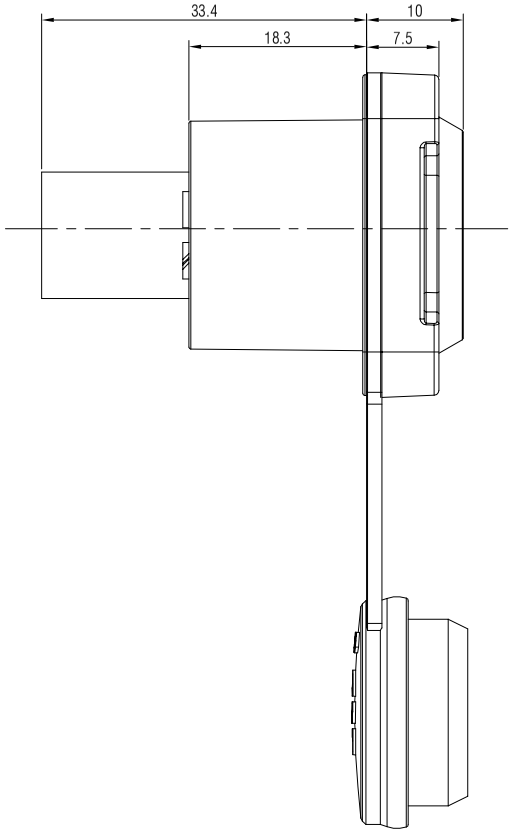

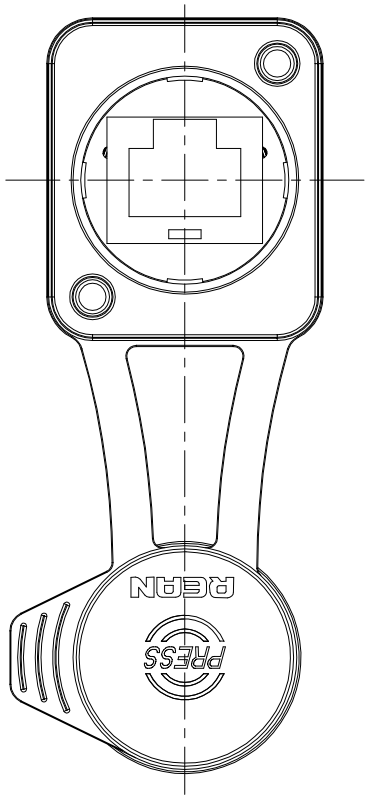

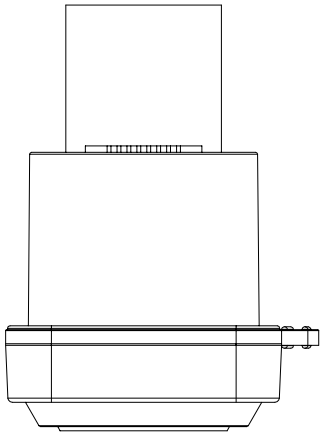

Note:
1. All dimensions in mm.
2. Tolerances not specified is ±0.1mm.

Rev.	Revision Details	Date	Name

THIS DOCUMENT IS THE PROPERTY OF NEUTRIK. NO PART THEREOF MAY BE REPRODUCED AND USED WITHOUT THE PRIOR WRITTEN CONSENT OF THE OWNER

Material:

Scale: 2 : 1 (A3)

	Date:	Name:
Designer:	2023.04.26	Wenqing.Huang
Checked:		
Approved:		

Title: RRE8F-Z-110-0

Replaced By: 1

Replaces: 1

REAN

Drawing No.: