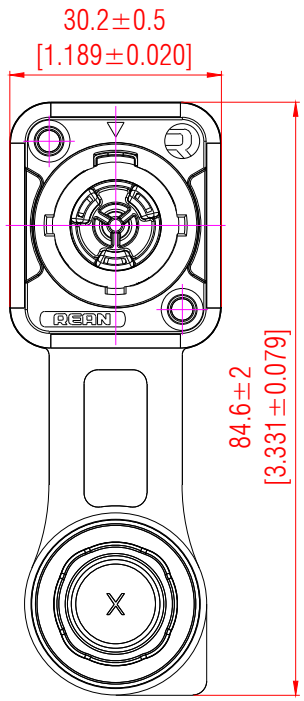

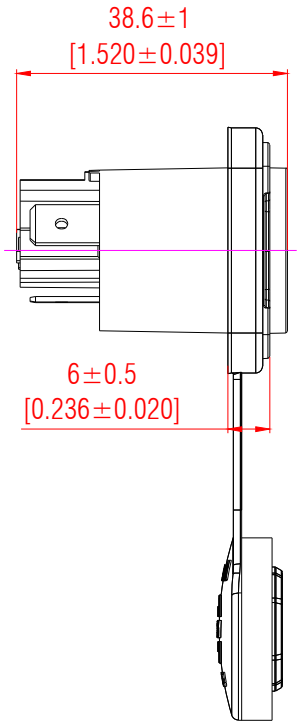

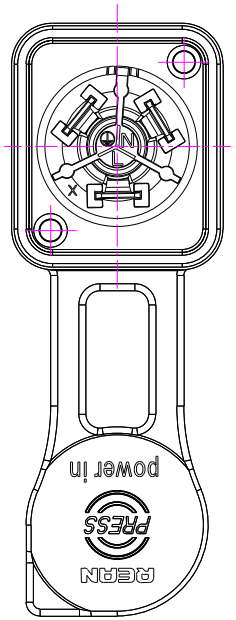

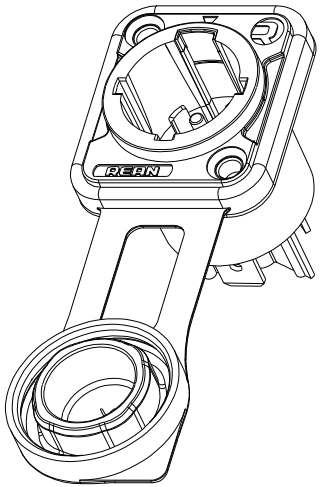

Panel cut out (Rear side)

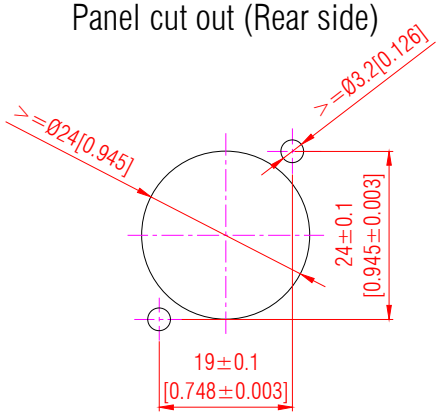

Note:
1. All dimensions in mm.
2. Tolerances not specified is ±0.20mm.

Rev.	Revision Details	Date	Name
B	Incremental inch mark	2023.10.30	Wenqing.huang
A	Initial release	2023.9.25	Wenqing.huang

THIS DOCUMENT IS THE PROPERTY OF NEUTRIK. NO PART THEREOF MAY BE REPRODUCED AND USED WITHOUT THE PRIOR WRITTEN CONSENT OF THE OWNER

Material:

Scale: 1 : 1 (A4)

	Date:	Name:
Designer:	2023.10.30	Wenqing.huang
Checked:	2023.10.30	Dany
Approved:		

Title: RRAC3M-X-010

Replaced By: 1

Replaces: 1

Drawing No.:

REAN